PART IA—AC-TO-DC SWITCHING POWER SUPPLIES

LAMBDA'S INDUSTRIAL LY SERIES

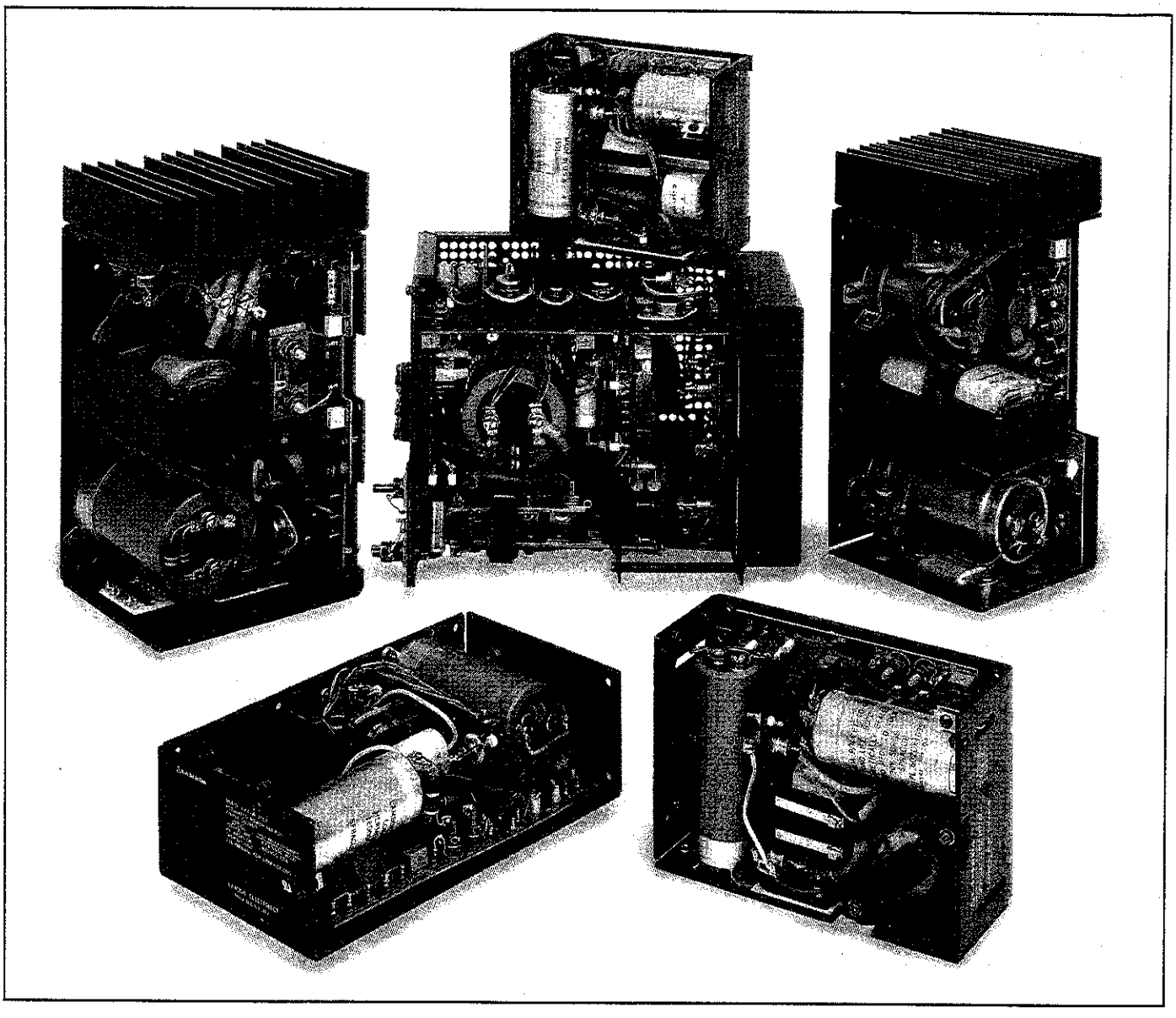

24 MODELS AVAILABLE IN 120VAC

- Each model has been optimized for the US market at 120VAC.
- All models designed for use in the US are UL recognized and CSA certified.
- 24 models available in 7 package sizes, from 55W up to 600W. Lambda's LY Series has been in production for over 10 years, and offers a selection that allows the user to pick the supply that most closely matches the load requirements, thus minimizing costs.
- Grade 2 design.

PART IA—AC-TO-DC SWITCHING POWER SUPPLIES

LAMBDA'S INDUSTRIAL LY SERIES

DC OUTPUT
Voltage range shown in tables.

REGULATED VOLTAGE
regulation, line ..... 0.1%.
regulation, load ..... 0.1%.
ripple and noise
(20MHz Bandwidth) ..... 10mV RMS, 75mV pk-pk for 5V and 6V outputs. 15mV RMS, 150mV pk-pk for 12V through 28V outputs. 25mV RMS, 250mV pk-pk for all 48V models.
temperature
coefficient ..... 0.03%/°C.
remote programming
resistance ..... 200Ω/V.
remote programming
voltage ..... volt per volt.

AC INPUT
line ..... 105 to 132VAC, 47-440Hz (187 to 265VAC, 47-440Hz for LYS-EE).
power ..... LYS-Y: 130 watts maximum.
LYS-X: 200 watts maximum.
LYS-W: 380 watts maximum.
LYS-P: 510 watts maximum.
LYS-K: 700 watts maximum.
LYS-D: 1150 watts maximum.
LYS-EE: 1800 watts maximum.

DC INPUT
145VDC ± 10% (does not apply to LYS-EE models).
42 to 60VDC on LYS-"D" models.

EFFICIENCY
60% min for LYS-Y models. 64% min for LYS-X and LYS-W models. 67% min for LYS-P models. 65% min for LYS-K and LYS-D models. 78% min for 5V and 6V models of LYS-EE. 80% min for 12V and 15V models of LYS-EE. 82% min for all other LYS-EE models. 70% min on all LYS-"D" models.

OVERSHOOT
No overshoot at turn-on, turn-off, or power failure.

OPERATING TEMPERATURE RANGE
Continuous duty 0°C to 60°C with suitable derating shown in tables.

STORAGE TEMPERATURE RANGE
−55°C to +85°C.

OVERLOAD PROTECTION ELECTRICAL
External overload protection, automatic electronic current limiting circuit limits the output current to a preset value, thereby providing protection for the load as well as the power supply.

COOLING
Convection cooled, no fans or blowers needed.

IN-RUSH LIMITING
LYS-D and LYS-EE models only. Limits in-rush current at turn-on.

EMI
EMI suppression cover available as accessory (except on LYS-EE). Provides additional filtering sufficient for compliance to FCC Docket 20780, Class A conducted; perforated cover minimizes radiated emission. Customer input and output connections via barrier strips mounted on cover and studs mounted on cover of LYS-P, LYS-D and LYS-K models. Output current must be derated 10% with cover, 15% for LYS-D with cover. Ripple and noise when cover is used is 10mV RMS to 35mV pk-pk for 5V and 6V units. 15mV RMS, 100mV pk-pk for 12V through 28V units. See Part IV of this catalog for cover model and price for each LY series.

DC OUTPUT CONTROLS
Simple screwdriver voltage adjustment over the entire voltage range.

INPUT AND OUTPUT CONNECTIONS
Solder terminals located on printed circuit boards (studs for LYS-X, W, P, K and heavy duty studs for LYS-D). When EMI suppression cover is used connections through barrier strips or terminal board mounted on cover. Barrier strips for AC input of LYS-D. LYS-EE has 1-inch heavy duty copper bus bars for DC output and solder terminals adjacent to output bus bars for DC sensing.

MOUNTING
Three mounting surfaces and three mounting positions. One mounting surface and one mounting position for LYS-P, LYS-K, LYS-D and LYS-EE.

POWER FAILURE
Hold up time. 5V and 6V models and all LYS-D models will remain within regulation limits for at least 16.7 msec. after loss of AC power when operating at full load, V_{OUT} max and minimum input at 60Hz.

REMOTE SENSING
Provision is made for remote sensing to eliminate the effects of power output lead resistance on DC regulation.

PHYSICAL DATA

Package Model	Weight (without cover) Lbs. Net	Lbs. Ship	Size Inches
LYS-Y	2¾	3	5⅝ × 4⅞ × 2½ (w/o cover)
	—	—	5⅝ × 4⅞ × 3 5/16 (w cover)
LYS-X	4	4½	7 × 4⅞ × 2¾ (w/o cover)
	—	—	7 × 4⅞ × 3 5/16 (w cover)
LYS-W	5½	6	9 × 4⅞ × 2¾ (w/o cover)
	—	—	9 × 4⅞ × 3¾ (w cover)
LYS-P	8½	10½	10 × 4⅞ × 4 7/16 (w/o cover)
	—	—	10 × 4⅞ × 5 9/16 (w cover)
LYS-K	11	13½	10 × 4⅞ × 5½ (w/o cover)
	—	—	10 × 4⅞ × 7½ (w cover)
LYS-D	12½	15½	7½ × 9½ × 4 13/16 (w/o cover)
	—	—	7½ × 11 × 4 13/16 (w cover)
LYS-EE	23	33	7½ × 16½ × 4 13/16 (w and w/o cover)

ACCESSORIES
For rack adapters and other accessories, see Part IV of this catalog.

FINISH
Gray, Fed. Std. 595, No. 26081.

GUARANTEED FOR 1 YEAR
One year guarantee includes labor as well as parts.

SAFETY AGENCY APPROVALS
All models are UL recognized and CSA certified.

PART IA—AC-TO-DC SWITCHING POWER SUPPLIES

INDUSTRIAL SWITCHING SELECTOR GUIDE

Single Output.

MAX CURRENT AT OPERATING TEMPERATURE OF 40°C	50°C	60°C	COMPLETE ELEC. SPEC. PG.	COMPLETE MECH. SPEC. PG.	DIMENSIONS (inches)	LAMBDA'S CHOICE (Δ)*	PRICE QTY. 1	QTY. 10	QTY. 25	QTY. 100	QTY. 250	QTY. 1000	MODEL
5V ±5% ADJ.													
11.0	11.0	9.5	49	163	5⅜ × 4⅞ × 2½	–	312	298	285	252	238	–	LYS-Y-5
20.0	17.7	15.0	49	162	7 × 4⅞ × 2¾	–	371	354	339	300	282	–	LYS-X-5
35.0	31.5	27.5	49	162	9 × 4⅞ × 2¾	–	455	434	416	370	348	–	LYS-W-5
50.0	46.0	40.0	49	162	10 × 4⅞ × 4 7/16	–	581	554	531	469	432	–	LYS-P-5
70.0	61.0	50.0	49	162	10 × 4⅞ × 5½	–	804	766	735	651	614	–	LYS-K-5-OV
120.0	104.0	86.0	49	161	7½ × 9½ × 4 13/16	–	1125	1073	1029	885	858	–	LYS-D-5-OV
12V ±5% ADJ.													
6.0	6.0	5.1	49	163	5⅜ × 4⅞ × 2½	–	312	298	285	252	238	–	LYS-Y-12
10.4	9.3	7.8	49	162	7 × 4⅞ × 2¾	–	371	354	339	300	282	–	LYS-X-12
20.0	18.0	15.0	49	162	9 × 4⅞ × 2¾	–	455	434	416	370	348	–	LYS-W-12
29.0	27.0	23.0	49	162	10 × 4⅞ × 4 7/16	–	581	554	531	469	432	–	LYS-P-12
40.0	35.0	29.0	49	168	10 × 4⅞ × 5½	–	757	721	692	611	576	–	LYS-K-12
15V ±5% ADJ.													
5.0	5.0	4.3	49	163	5⅜ × 4⅞ × 2½	–	312	298	285	252	238	–	LYS-Y-15
8.5	7.5	6.3	49	162	7 × 4⅞ × 2¾	–	371	354	339	300	282	–	LYS-X-15
16.5	14.5	12.0	49	162	9 × 4⅞ × 2¾	–	455	434	416	370	348	–	LYS-W-15
24.0	22.0	19.0	49	162	10 × 4⅞ × 4 7/16	–	581	554	531	469	432	–	LYS-P-15

PART IA—AC-TO-DC SWITCHING POWER SUPPLIES

Single Output.

MAX CURRENT AT OPERATING TEMPERATURE OF 40°C	50°C	60°C	COMPLETE ELEC. SPEC. PG.	COMPLETE MECH. SPEC. PG.	DIMENSIONS (inches)	LAMBDA'S CHOICE (Δ)*	PRICE QTY. 1	QTY. 10	QTY. 25	QTY. 100	QTY. 250	QTY. 1000	MODEL
24V ±5% ADJ.													
3.3	3.3	2.6	49	163	5⅝ × 4⅞ × 2½	—	312	298	285	252	238	—	LYS-Y-24
5.7	4.9	4.0	49	162	7 × 4⅞ × 2¾	—	371	354	339	300	282	—	LYS-X-24
10.5	9.5	8.0	49	162	9 × 4⅞ × 2¾	—	455	434	416	370	348	—	LYS-W-24
15.5	14.0	12.0	49	162	10 × 4⅞ × 4 7/16	—	581	554	531	469	432	—	LYS-P-24
21.0	18.0	15.0	49	162	10 × 4⅞ × 5½	—	757	721	692	611	576	—	LYS-K-24
32.0	28.0	23.0	49	161	7½ × 9½ × 4 13/16	—	1125	1073	1029	885	858	—	LYS-D-24-OV

*28V models continued on next page.

PART IA—AC-TO-DC SWITCHING POWER SUPPLIES

INDUSTRIAL SWITCHING SELECTOR GUIDE

Single Output.

MAX CURRENT AT OPERATING TEMPERATURE OF 40°C	50°C	60°C	COMPLETE ELEC. SPEC. PG.	COMPLETE MECH. SPEC. PG.	DIMENSIONS (inches)	LAMBDA'S CHOICE (△)*	PRICE QTY. 1	QTY. 10	QTY. 25	QTY. 100	QTY. 250	QTY. 1000	MODEL
28V ±5% ADJ. (continued)													
5.0	4.3	3.5	49	162	7 × 4 7/8 × 2 3/4	—	371	354	339	300	282	—	LYS-X-28
9.5	8.5	7.0	49	162	9 × 4 7/8 × 2 3/4	—	455	434	416	370	348	—	LYS-W-28
13.5	12.5	10.5	49	162	10 × 4 7/8 × 4 7/16	—	581	554	531	469	432	—	LYS-P-28
48V ±5% ADJ.													
5.3	4.7	3.9	49	162	9 × 4 7/8 × 2 3/4	—	455	434	416	370	348	—	LYS-W-48

PART V—MECHANICAL DRAWINGS

LST-5V, LST-5B, LST-5C, LST-5D, LST-5E, LST-5F, LST-5G, LST-5H, LST-5J, LST-5K, LST-5L, LST-5M, LST-5N, LST-5P, LST-5Q, LST-5R, LST-5S, LST-5T, LST-5U, LST-5W, LST-5X, LST-5Y, LST-5Z, LST-6V, LST-6B, LST-6C, LST-6D, LST-6E, LST-6F, LST-6G, LST-6H, LST-6J, LST-6K, LST-6L, LST-6M, LST-6N, LST-6P, LST-6Q, LST-6R, LST-6S, LST-6T, LST-6U, LST-6W, LST-6X, LST-6Y, LST-6Z, LST-38, LST-39, LST-40 AND LYS-D

LYS-D Series
M-YSD-2

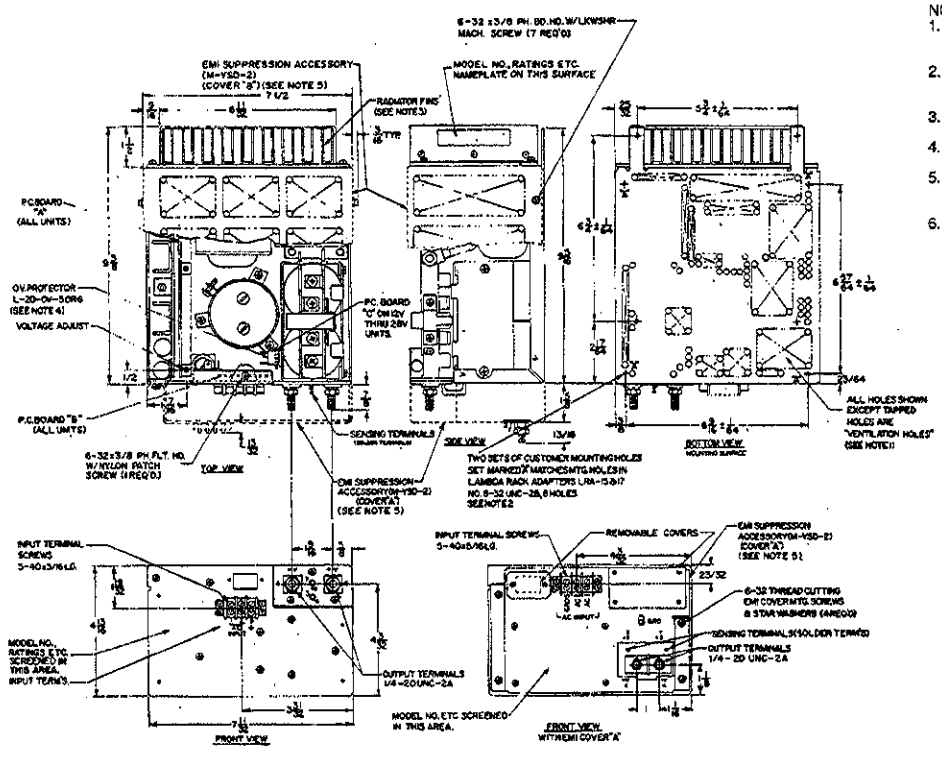

NOTES:
1. CUSTOMER MUST PROVIDE ADEQUATE CLEARANCE IN HIS MOUNTING AREA TO ALLOW FOR MAXIMUM AIR CIRCULATION.
2. CUSTOMER MOUNTING SCREWS MUST NOT PROTRUDE INTO POWER SUPPLY BY MORE THAN 3/8 INCH.
3. POWER SUPPLY TO BE MOUNTED SO THAT RADIATOR FINS ARE IN VERTICAL POSITION.
4. BUILT-IN OVERVOLTAGE PROTECTION PROVIDED ON 5V AND 6V UNITS.
5. EMI SUPPRESSION ACCESSORY COMPLETE WITH STAR WASHERS AND THREAD-CUTTING SCREWS.
6. THE LYS-DD MEASURES 9-1/2 × 7-1/2 × 4-13/16 INCLUDING TERMINAL SCREWS (HEAT SINK ON BOTH SIDES). CONSULT FACTORY FOR COMPLETE DIMENSIONAL DRAWINGS.

TABLE OF WEIGHTS

MODEL	NET WT (LBS)	SHIPPING WT (LBS)	
LYS-D (ALL)	12.5	15.5	W/O EMI ACCESSORY
M-YSD-2	2.5	5.0	SEE NOTE 5

PART V—MECHANICAL DRAWINGS

LYS-K, LYS-P, LYS-W AND LYS-X

LYS-K
M-YSK-2
LYS-KD

LYS-P
M-YSP-2
LYS-PD

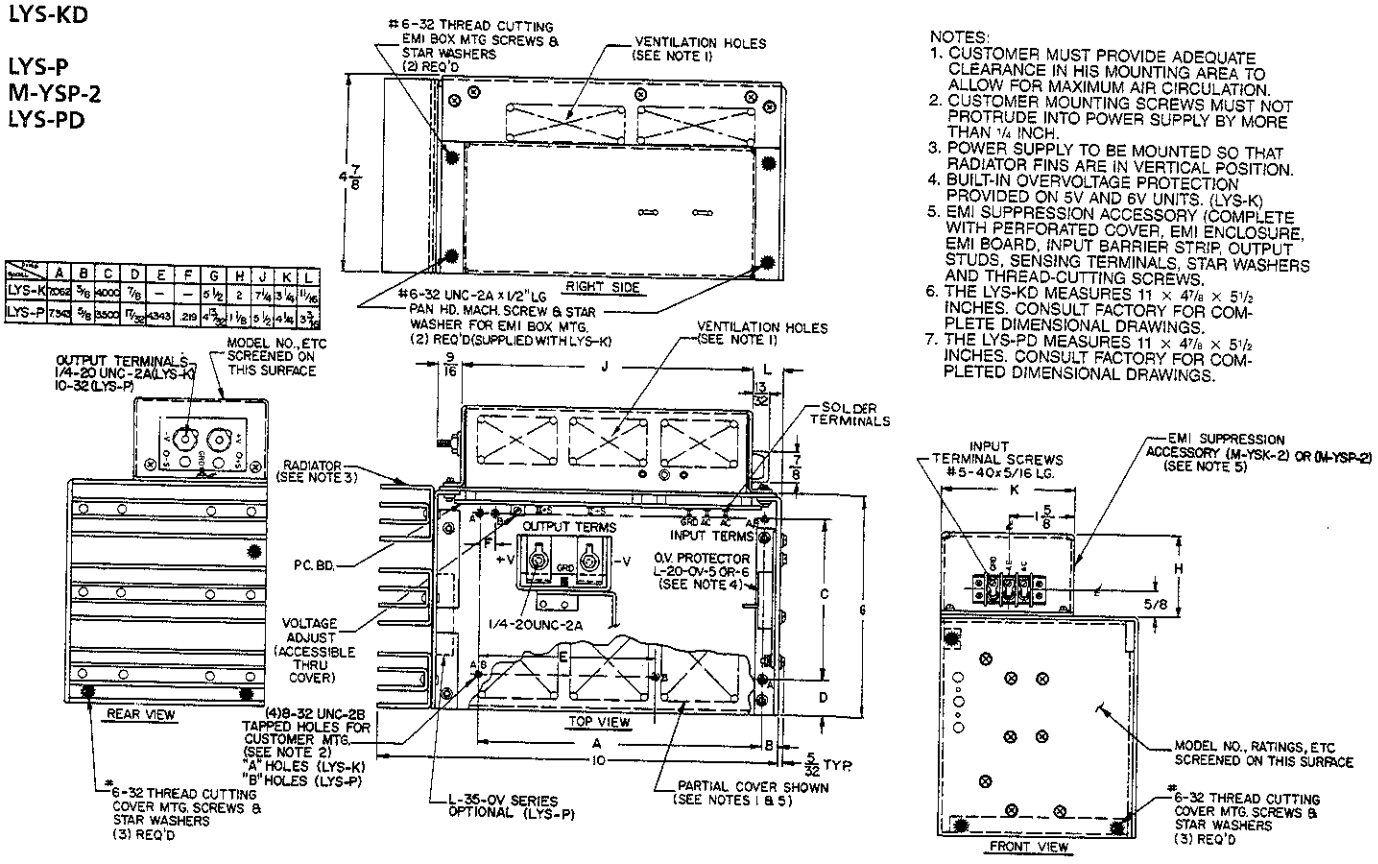

	A	B	C	D	E	F	G	H	J	K	L
LYS-K	.7062	3/8	.4000	7/8	—	—	5 1/2	2	7 1/4	3 1/4	11/16
LYS-P	.7342	5/8	.3500	11/32	.4343	.219	4 13/32	1 1/8	5 1/2	4 1/4	3 3/16

NOTES:
1. CUSTOMER MUST PROVIDE ADEQUATE CLEARANCE IN HIS MOUNTING AREA TO ALLOW FOR MAXIMUM AIR CIRCULATION.
2. CUSTOMER MOUNTING SCREWS MUST NOT PROTRUDE INTO POWER SUPPLY BY MORE THAN 1/4 INCH.
3. POWER SUPPLY TO BE MOUNTED SO THAT RADIATOR FINS ARE IN VERTICAL POSITION.
4. BUILT-IN OVERVOLTAGE PROTECTION PROVIDED ON 5V AND 6V UNITS. (LYS-K)
5. EMI SUPPRESSION ACCESSORY (COMPLETE WITH PERFORATED COVER, EMI ENCLOSURE, EMI BOARD, INPUT BARRIER STRIP, OUTPUT STUDS, SENSING TERMINALS, STAR WASHERS AND THREAD-CUTTING SCREWS.
6. THE LYS-KD MEASURES 11 × 4 7/8 × 5 1/2 INCHES. CONSULT FACTORY FOR COMPLETE DIMENSIONAL DRAWINGS.
7. THE LYS-PD MEASURES 11 × 4 7/8 × 5 1/2 INCHES. CONSULT FACTORY FOR COMPLETED DIMENSIONAL DRAWINGS.

LYS-W
M-YSW-2
LYS-WD

LYS-X
M-YSX-2

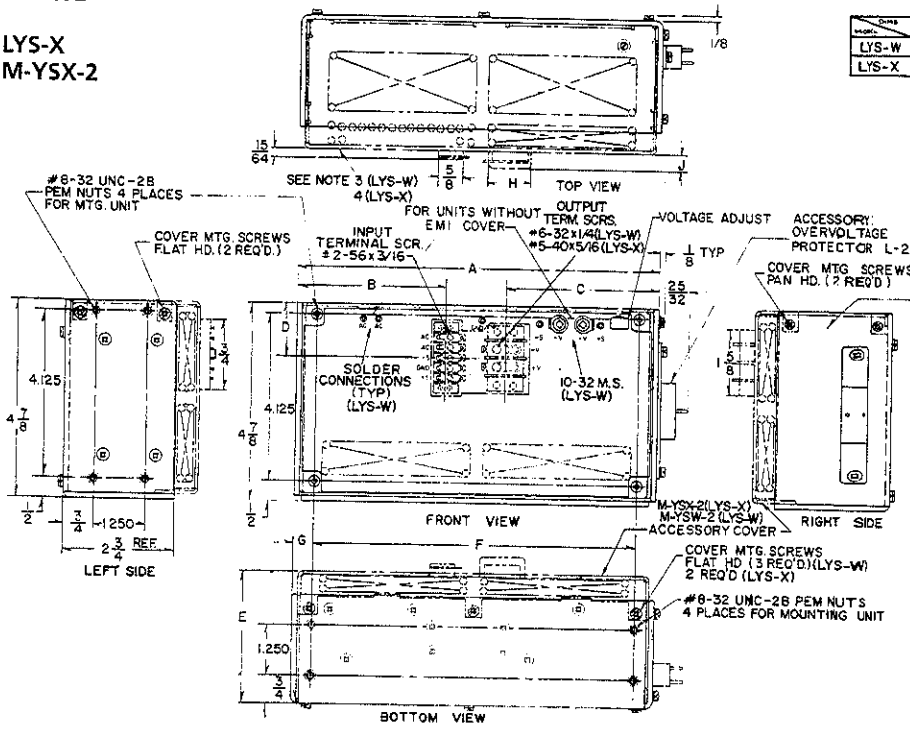

	A	B	C	D	E	F	G	H	J
LYS-W	9	3 3/4	3 5/64	1 7/16	3 3/4	8.000	1/2	1 1/8	27/64
LYS-X	7	2 3/32	2 7/8	1 17/64	3 5/16	6.250	3/8	7/8	21/64

NOTES:
1. CUSTOMER TO PROVIDE CLEARANCE IN HIS MOUNTING SURFACE FOR VENT HOLES TO ALLOW FOR AIR CIRCULATION.
2. CUSTOMER MOUNTING SCREWS MUST NOT PROTRUDE INTO POWER SUPPLY BY MORE THAN 1/4 INCH.
3. ACCESSORY COVER (SHOWN IN PHANTOM) WITH EMI BOARD INPUT AND OUTPUT STRIPS. COVER MOUNTING SCREWS ARE INDICATED BY ● AND ◎ (7 PLACES) AND MUST BE REMOVED BEFORE COVER IS REMOVED. THE (7) COVER MOUNTING SCREWS, WHICH MUST BE 7/16" LONG AND THREAD CUTTING, ARE SUPPLIED WITH COVER TOGETHER WITH (7) STARWASHERS.
4. OPTIONAL COVER COMPLETE WITH EMI BOARD, INPUT & OUTPUT BARRIER STRIPS, (6) STAR WASHERS & (6) THREAD CUTTING SCREWS.
5. THE LYS-WD MEASURES 9 × 4 7/8 × 5 1/2 INCHES. CONSULT FACTORY FOR COMPLETE DIMENSIONAL DRAWINGS.

PART V—MECHANICAL DRAWINGS

LYS-Y, EWS-1500 AND EWS-3000T

LYS-Y Series
M-YSY-2

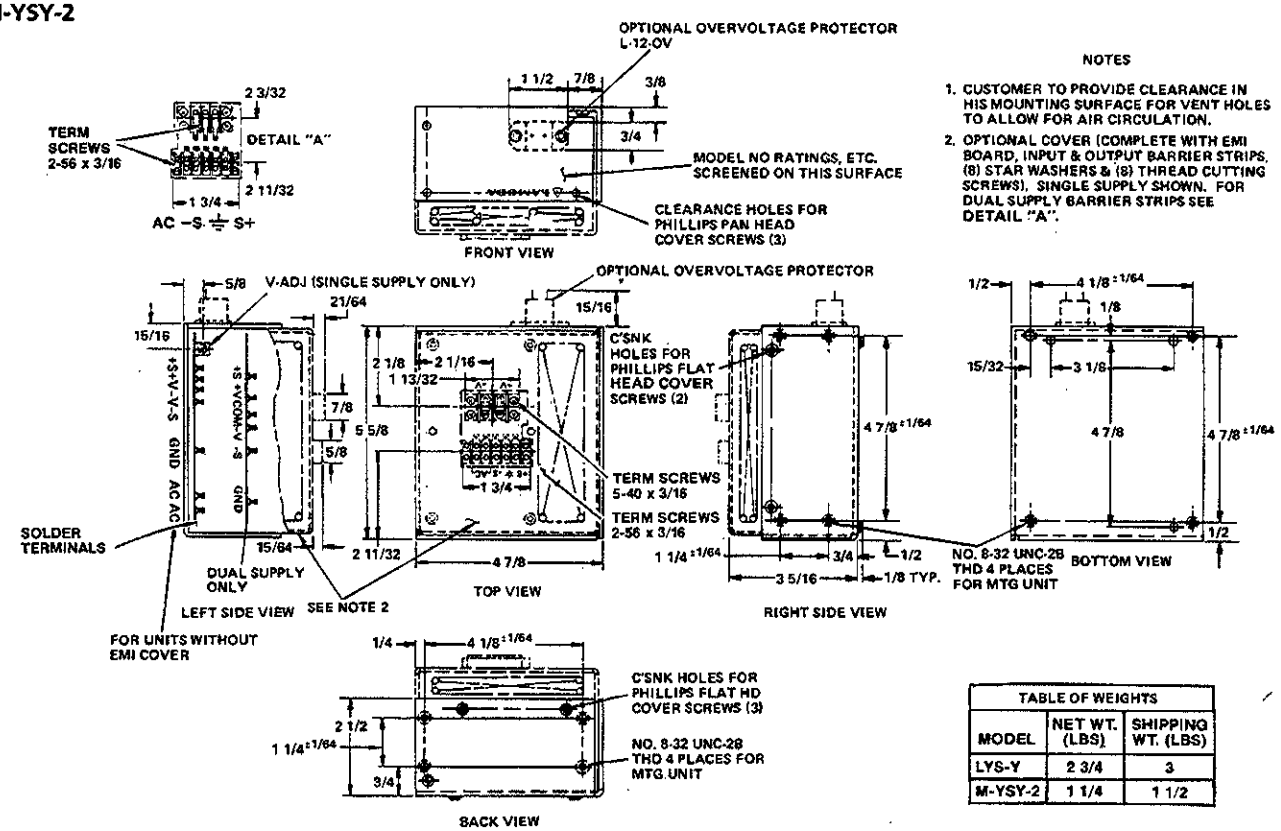

NOTES

1. CUSTOMER TO PROVIDE CLEARANCE IN HIS MOUNTING SURFACE FOR VENT HOLES TO ALLOW FOR AIR CIRCULATION.
2. OPTIONAL COVER (COMPLETE WITH EMI BOARD, INPUT & OUTPUT BARRIER STRIPS, (8) STAR WASHERS & (8) THREAD CUTTING SCREWS), SINGLE SUPPLY SHOWN. FOR DUAL SUPPLY BARRIER STRIPS SEE DETAIL "A".

TABLE OF WEIGHTS		
MODEL	NET WT. (LBS)	SHIPPING WT. (LBS)
LYS-Y	2 3/4	3
M-YSY-2	1 1/4	1 1/2